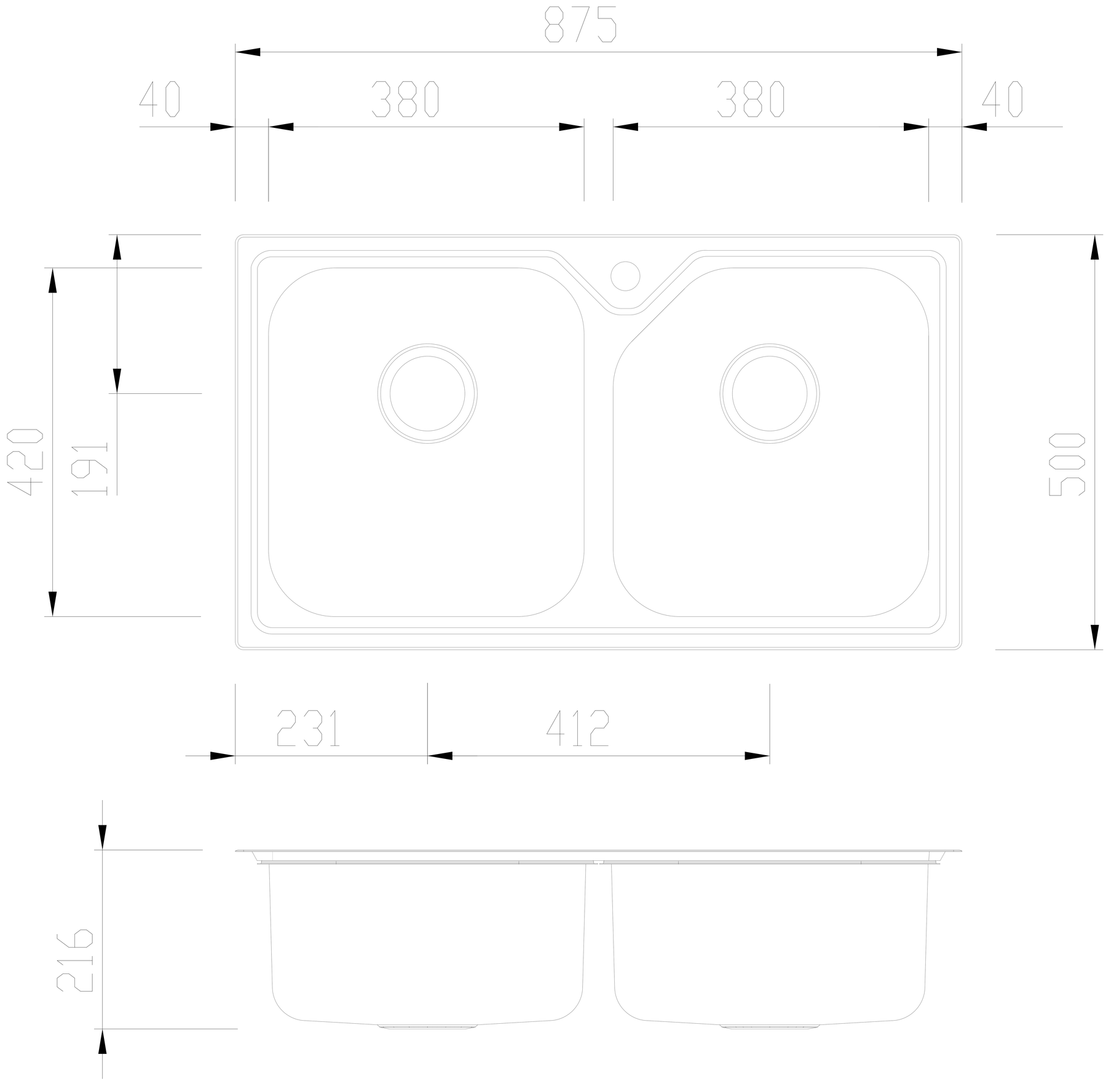

Oliveri

CAD Drawing: NP663