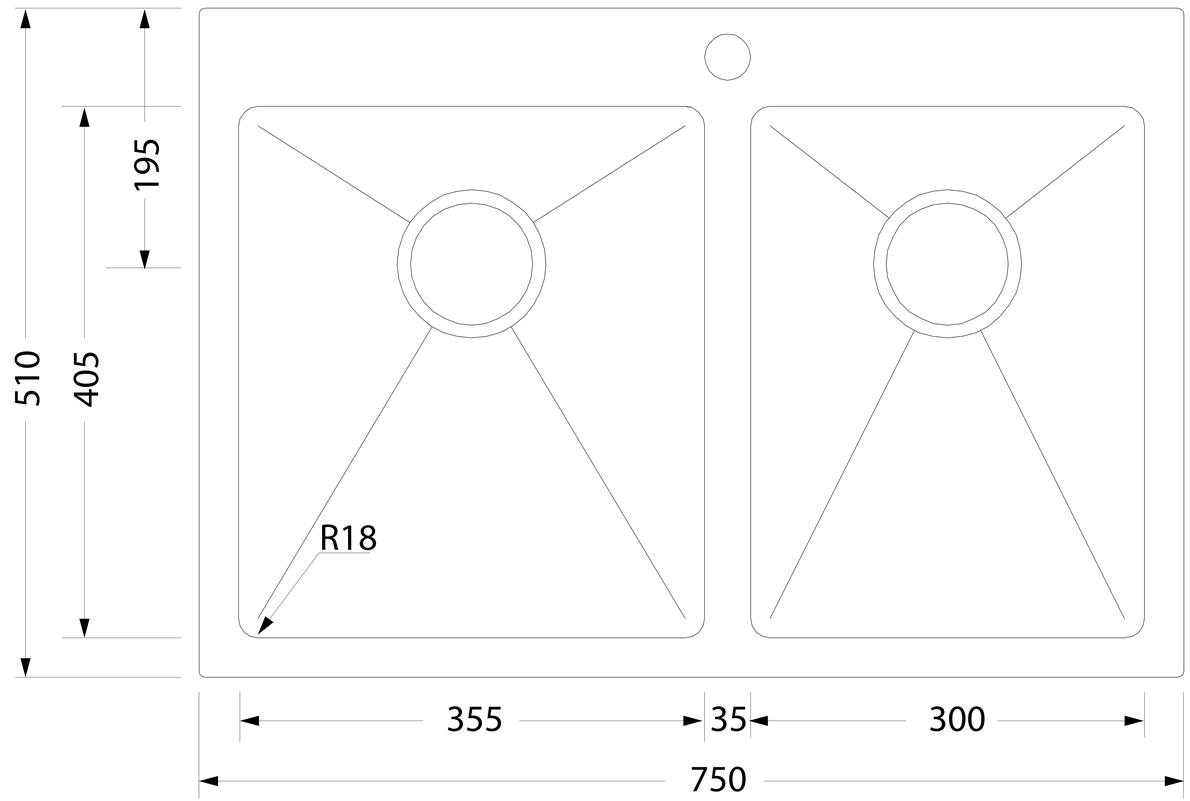

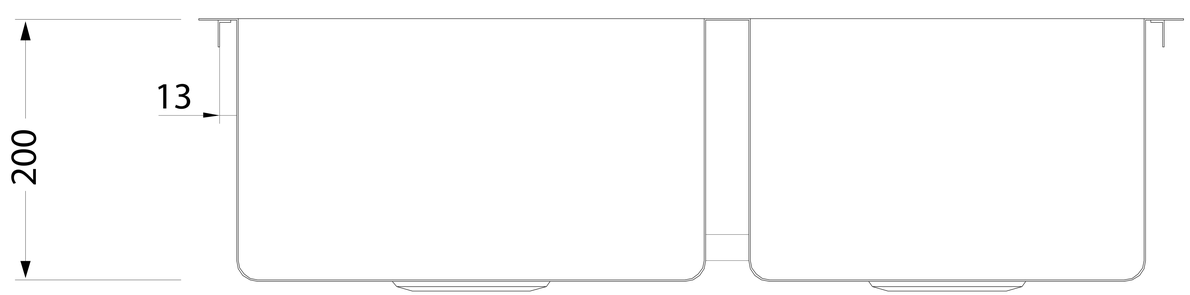

Oliveri

CAD Drawing: AP1425